Vent-Free Fireplaces, Fireboxes and Logs

Bring a room to life with the comfort of our Vent-Free Fireplaces, Fireboxes and Fireplace Logs

Freestanding Vent-Free Fireplace ►

Our freestanding vent-free fireplaces need no hearth – they sit anywhere, in any room, to bring you hearth-felt comfort! Offered in an ivory finish.

Deluxe Vent-Free Firebox ▼

Combine one of our vent-free fireboxes and fireplace log sets to enjoy all the comfort of flame-wrapped split oaks radiating warmth from your very own glowing hearth – and do it with 99.9% heat efficiency. All this without the expense of a chimney.

Vent-Free Fireplace Logs ▲

With our Williams' vent free fireplace log set, the exclusive cross-lighter design maintains full yellow flame even on low setting.

Design Features

- ❑ No electricity or venting required
- ❑ Easy installation
- ❑ Eliminates costly firewood
- ❑ Natural and propane gas models
- ❑ 99.9% heat efficient – *keeps all the heat in the room*
- ❑ Fireplace includes natural-looking, axe-split log sets

Vent-Free Fireplaces, Fireboxes and Fireplace Logs

VENT-FREE FIREBOXES

Model Number	Description	Screen Opening Width	Dimensions			Shipping Weight
			Width	Height	Depth	
4227	43" Deluxe Heat Circulating	42 3/4"	45 3/8"	38 3/4"	21 1/2"	178 lbs.

VENT-FREE FIREPLACE LOGS

Model Number		Btu/hr Input				Heat Settings	Log Size	No. Burners	No Logs	Shipping Weight
		High Setting		Low Setting						
Natural	Propane	Natural	Propane	Natural	Propane					
2100542	2100541	21,000	21,000	15,750	15,750	MANUAL HIGH-LOW	21"	1	4	29 lbs.

Minimum Fireplace Dimensions For Vent-Free Fireplace Logs are 14" depth and 16" height.
Width requirements by model are: *(2100 and 3200 Series, 26" front/22" rear).*

FREESTANDING AND VENT-FREE FIREPLACES*

Model Number		Btu/hr Input		Heat Settings	Efficiency %	Dimensions H x W x D	Color	Shipping Weight
Natural	Propane	Natural	Propane					
2506542.10	- -	25,000	- -	High-Low	99.9	29" x 23 7/8" x 16 1/4"	Freestanding (Ivory)	99 lbs.

*All units include four-log set.

Features

Vent-Free Fireboxes

Williams' full-size vent-free fireboxes are designed specifically for Williams' vent-free fireplace logs. Our vent-free fireboxes feature large brick refractories for a genuine masonry look. A right-side knockout provides convenient gas line access. Each firebox comes with a black, luster-finished heat deflection canopy. An optional polished brass trim kit is available for deluxe models. Firebox is shipped ready to install. *No other gas log sets are to be installed in these fireboxes.*

Vent-Free Fireplace Logs

Williams' Vent-Free Fireplace Logs can be installed in solid-fuel burning masonry and factory-built fireplaces that have been properly installed with venting according to code. Damper may be in the closed position when using Williams' Vent-Free Fireplace Logs.

Single-Burner Design Includes: Four Logs, Lava Rock, and a Placement Grate with a Single Burner.

Dimensional Data

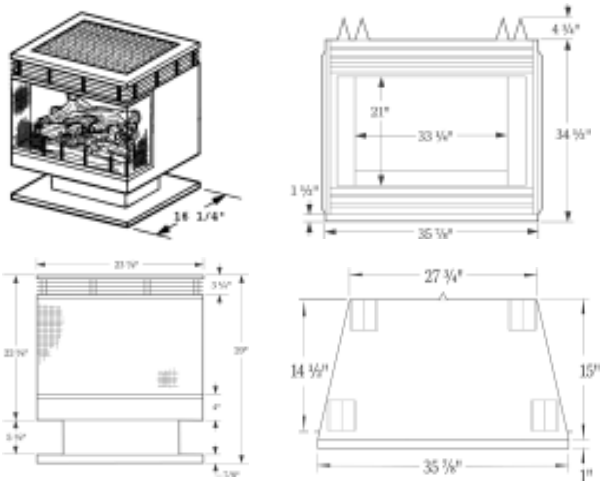

Accessories

Polished Brass Trim Kit

Kit is complete with trim pieces and one header piece, in polished brass.
Model 4231. Shipping weight 3 lbs.

Adjustable Canopy

The adjustable canopy easily expands from 28" to 48" to accommodate various masonry and wood-burning fireplaces.
Available in black **Model 4233** Shipping weight 6 lbs. and polished brass **Model 4232** for existing fireplace when vent-free log set is installed. Shipping weight 6 lbs.

Recommended Minimum Clearances

Vent-Free Fireboxes

- 16" from side of wall to the fireplace opening
- 42" from the top of the firebox opening to the ceiling
- 14" noncombustible hearth extension in front of firebox or the fireplace log set base must be 5" above combustible flooring material
- See owner's manual for mantel installation

Freestanding Vent-Free Fireplace

- 4" from rear wall
- 12" from side of wall
- 42" from top of the heater opening to the ceiling

IMPORTANT

- Read owner's manual before using.
- Photographs are representative only.
- Check local codes and ordinances for permitted uses.
- Do not install the firebox in a sleeping room or bathroom.
- Freestanding Fireplace accepted by NFPA, CABO, SBCCI and BOCA building codes.
- Specify propane or natural gas when ordering. Units are not intended for conversion between fuel types.
- Consult installation manual for clearances prior to installation.
- We reserve the right to amend product specifications without notice.
- Installation and servicing recommended by a qualified service person.
- Use with adequate air (ventilation) only. Refer to owner's manual for details.
- Please read the warranty for any limitations or disclaimers. All parts carry a one-year limited warranty.

WILLIAMS

250 West Laurel Street • Colton, California 92324 U.S.A.
(909) 825-0993 • Fax: (909) 824-8009 or 370-0581
Consumer Line: (888) 256-6465
Homeowner Assistance: (909) 426-0978
www.e-wfc.com

©2008 Williams Furnace Co. Printed in U.S.A. All Rights Reserved Subject to Change without Notice